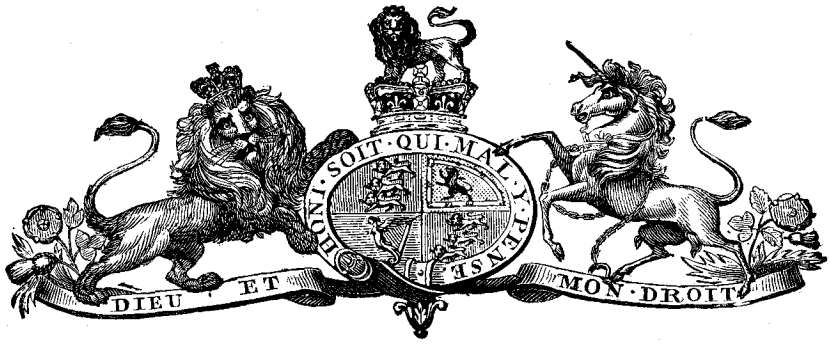

Patents, Designs, and Trade Marks

SUPPLEMENT

TO THE

NEW ZEALAND GAZETTE

OF

THURSDAY, FEBRUARY 24, 1910.

Published by Authority.

WELLINGTON, THURSDAY, FEBRUARY 24, 1910.

CONTENTS.

International and Intercolonial Arrangements for the Mutual Protection of Patents and Trade Marks.

International Convention.

THE following countries now belong to the Convention :—

Australia.	Italy.
Austria-Hungary.	Japan.
Belgium.	Mexico.
Brazil.	New Zealand.
Ceylon.	Norway.
Cuba.	Portugal, with the Azores and Madeira.
Denmark and Faroe Islands.	Servia.
Dominican Republic.	Spain.
France, with Algeria and Colonies.	Sweden.
Germany.	Switzerland.
Great Britain.	Tunis.
Holland, with East Indian Colonies, Curaçoa, and Surinam.*	United States of America.

* Trade marks only.

Separate arrangements have been made between Australia and New Zealand.

Particulars of the Convention and of such arrangements may be seen in the following *Gazettes* :—

Notification of adhesion of New Zealand to the Convention, with text thereof (in English), in the *Gazette* of 26th November, 1891; notification of adherence of New Zealand to the Additional Act of the Convention, with text (in English), of such Additional Act, in Patents Supplement to *Gazette* No. 101, of the 16th November, 1905; Order in Council applying section 103 of the Imperial Act to New Zealand, in *Gazette* No. 27, of the 15th May, 1890; Orders in Council containing arrangements between Australia and New Zealand, in Patent Supplements to the *Gazette* Nos. 22 of the 9th March, 1905, and 38 of the 20th April, 1905.

Commonwealth of Australia.

Act to amend "The Patents Act, 1903."

THIS Act, assented to on the 13th December last, provides for—

Extension of Act to Papua,
Recovery of costs,
Single patent for cognate inventions,
Patents of addition,
Restoration of lapsed patents,
Grant of patent in lieu of patent revoked on ground of fraud,
Revocation of patent where invention is not worked to an adequate extent in the Commonwealth,
Avoidance of certain conditions attached to sale, &c., of patented articles,
Remedy in case of groundless threats of legal proceedings,
Devolution of patents,
Etc.

Copies may be seen at the Patent Office, Wellington, and at the local Patent Offices, Auckland, Christchurch, and Dunedin.

Applications for Letters Patent filed.

LIST of applications for Letters Patent filed. (Where a complete specification accompanies an application an asterisk is affixed; in all other cases a provisional specification has been lodged. In all cases where the applicant is not the inventor the name of the latter appears in italics in brackets. † Denotes an application under the International and Intercolonial Arrangements.)

Submarine Signal Company, Boston, U.S.A. (*Williams, R. L.*)	Sounder for submarine signalling*; 27235; 1st February.
McFeely, R. F., Beverley, U.S.A.	Pulling-over machine*; 27236; 19th April, 1909.†
Ries, E. E., New York, U.S.A.	Pipe and tubing manufacture*; 27237; 3rd February.
United Shoe Machinery Company, Paterson, U.S.A. (*Perry, F. H.*)	Boot-sole machine; 27238; 3rd February.
United Shoe Machinery Company, Paterson, U.S.A. (*Perry, F. H.*)	Boot-edge-trimming or shoe-sole machine; 27239; 3rd February.
United Shoe Machinery Company, Paterson, U.S.A. (*Wells, C. S., and Darnill, W. W.*)	Shoe-upper-lacing machine; 27240; 3rd February.
de Jersey, C. L., Melbourne, Vic.	Paper-bag-making machine*; 27241; 3rd February.
Carruthers, R., Levin, N.Z.	Milk-can*; 27242; 3rd February.
Stevenson, T., Gore, N.Z.	Chaffcutter-knife sharpener: 27243; 3rd February.
Falconer, T., Gore, N.Z.	Chaffcutter-knife sharpener: 27243; 3rd February.
Morse, C. O., Gisborne, N.Z.	Cooler and water-tank; 27244; 3rd February.
Gray, A., Gisborne, N.Z...	Cooler and water-tank; 27244; 3rd February.
Kainer, F. C., South Haven, U.S.A.	Cigar-vending machine*; 27245; 17th March, 1909.†
Lambie, R., jun., Oaonui, N.Z.	Air, exhausting, from closed vessels; 27246; 4th February.
Edlin, G. S., Oanui, N.Z.	Air, exhausting, from closed vessels; 27246; 4th February.
Vanstone, H. J., Little River, N.Z.	Bottle-stopper; 27247; 4th February.
Vowell, C., Ngaruawahia, N.Z.	Sounding-apparatus, ships' and mines' wells; 27248; 3rd February.
Widdowson, B., Christchurch, N.Z.	Potato bagger and digger; 27249; 4th February.
Barraclough, M., Hawera, N.Z.	Horse-controller*; 27250; 4th February.
Roseman, S. G., Auckland, N.Z.	Broom and brush manufacture; 27251; 5th February.
Sutherland, K., Mangahoe, N.Z.	Telescope; 27252; 5th February.
Corney, N. S., Montreal, Canada	Butter-blending machine*; 27253; 4th February.
Taylor, J. E., Mangere Bridge, N.Z.	Concrete pillar, &c.; 27254; 3rd February.
Earnshaw, E. A., Wellington, N.Z.	Propeller life-guard; 27255; 3rd February.
McLean, F. R., Waipatiki, N.Z.	Turbine; 27256; 7th February.
Price, J. V., Christchurch, N.Z.	Relief-block printing; 27257; 8th February.
Duncan, P. and D., Limited, Christchurch, N.Z. (*Keir, J.*)	Plough; 27258; 7th February.
American Automatic Telephone Company, Rochester, U.S.A. (*Goodrum, C. L.*)	Telephone system*; 27259; 5th February.
Dondey, A., Melbourne, Vic.	High-pressure filter*; 27260; 6th March, 1909.†
Testro, J. C., Melbourne, Vic.	High-pressure filter*; 27260; 6th March, 1909.†
Browne, E. H., Clevedon, N.Z.	Wire-strainer; 27261; 8th February.
Wallace, H. H., Oamaru, N.Z.	Horses and cattle throwing and securing; 27262; 8th February.
Saunders, J. H., Mylor, S. Aust.	Pump-piston bucket; 27263; 8th February.
Saunders, J. H., Mylor, S. Aust.	Pumping-gear; 27264; 8th February.
Jackson, J. W., New Plymouth, N.Z.	Sand, stopping, from drifting; 27265; 8th February.
Neilsen, G., Waipawa, N.Z.	Power-transmission, variable speed mechanism; 27266 8th February.

Wilton, T. J., Waipawa, N.Z.	Power-transmission, variable speed mechanism; 27266; 8th February.
Cairns, J. C., Havelock North, N.Z.	Aeroplane steadier and balancer; 27267; 8th February.
Colthurst, G. J., Frankton Junct., N.Z.	Liquid shine; 27268; 7th February.
Popkess, M. A., Kansas, U.S.A.	Road-surfacing*; 27269; 5th February.
Arbuckle, A. J., Belgravia, S. Africa	Solids and liquids, distributing, in vats, &c.*; 27270; 9th February.
Hume, E. F., Dunedin, N.Z.	Corset; 27271; 8th February.
Richardson, E., Hawthorn, Vic.	Slide-valves for fluid-pressure, steam, &c., engines*; 27272; 9th February.
Marshall, J. T., Leeds, Eng.	Slide-valves for fluid-pressure, steam, &c., engines*; 27272; 9th February.
May, R., Drummoyne, N.S.W.	Wardrobe*; 27273; 9th February.
May, F. E., Mosman, N.S.W.	Wardrobe*; 27273; 9th February.
Railton, A. W., Mosman, N.S.W.	Wardrobe*; 27273; 9th February.
Bowron, G. L., Opawa, N.Z.	Ignition for use in internal-combustion engines; 27274; 9th February.
Beales, J. A., Kogarah, N.S.W. (*Deeble, J. G.*)	Sports-ground signal; 27275; 10th February.
Marsden, H., Randwick, N.S.W. (*Deeble, J. G.*)	Sports-ground signal; 27275; 10th February.
Phillips, E. Melbourne, Vic. (Gesellschaft fur drahtlose Telegraphie, m. b. H.—*Graf von Arco, G., and Rendahl, R. H.*)	Electrical oscillations production*; 27276; 10th February.
Pickering, T. J., Leeston, N.Z.	Photograph-printing apparatus; 27277; 10th February.
Smith, A. L., Manhattan, U.S.A.	Carton*; 27278; 10th February.
Baumgaertner, Sydney, N.S.W.	Road-vehicle locomotion recorder*; 27279; 10th February.
Willcocks, F. G., Inaha, N.Z.	Milking-machine pulsator; 27280; 10th February.
Long, T. F., Gisborne, N.Z.	Billiard-cue tip; 27281; 8th February.
Love, W. J., Burnside, N.Z.	Cement-manufacture; 27282; 9th February.
Skelsey, F. W., Burnside, N.Z.	Cement-manufacture; 27282; 9th February.
Gilmour, D., Auckland, N.Z.	Step-ladder; 27283; 11th February.
Christian, A. R., Christchurch, N.Z.	Trolly-pole retriever; 27284; 10th February.
Reynolds, E. A., Christchurch, N.Z.	Trolly-pole retriever; 27284; 10th February.
Frith, W. H., Oamaru, N.Z.	Window; 27285; 12th February.
Simonson, A., Masterton, N.Z.	Kerosene, &c., filling appliance; 27286; 12th February.
King, G., Wellington, N.Z.	Kerosene, &c., filling appliance; 27286; 12th February.
Simonson, A., Masterton, N.Z.	Music-holder; 27287; 12th February.
King, G., Wellington, N.Z.	Music-holder; 27287; 12th February.
Cannell, J. E. P., Timaru, N.Z.	Tram-trucks, safety-catch for; 27288; 11th February.
Neilson, J. L., Dunedin, N.Z.	Boot-protector; 27289; 10th February.
Hansen, A. H., Manaia, N.Z.	Animal-leg fastener; 27290; 14th February.
Kruskopf, J. S., Hindon, N.Z.	Window ventilator*; 27291; 11th February.
Bicknell, W. W., Greytown, N.Z. (*Bicknell, C. A.*)	Signalling-apparatus; 27292; 14th February.
Kidd, T., Invercargill	Milking-apparatus*; 27293; 11th February.
Gardiner, A., Wellington, N.Z.	Milk-cooler*; 27294; 14th February.
Stephens, E., Wellington, N.Z.	Milk-cooler*; 27294; 14th February.
Christian, A. R., Christchurch, N.Z.	Trolly-pole retriever; 27295; 11th February.
Reynolds, E. A., Christchurch, N.Z.	Trolly-pole retriever; 27295; 11th February.
Mills, C., Christchurch, N.Z.	Flies, driving away; 27296; 14th February.
Bird, A. J., Wanganui, N.Z.	Boot heel and ventilator; 27297; 15th February.
Porteous, W. V., Wanganui, N.Z.	Boot heel and ventilator; 27297; 15th February.
Savage, T., Taneatua, N.Z.	Candle-extinguisher; 27298; 15th February.
Metcalfe, G., New Plymouth, N.Z.	Puncture-resisting material*; 27299; 14th February.
Bell, G. G., Kensington, Eng.	Heating-apparatus*; 27300; 15th February.
Miller, J. W., Casino, N.S.W.	Butter-cutter*; 27301; 15th February.
McKerihan, J. R., Casino, N.S.W.	Butter-cutter*; 27301; 15th February.
Armstrong, E., Enfield, Eng.	File, rasp, &c.*; 27302; 18th February, 1909.†
Nelson, T. H., Wellington, N.Z.	Sash-lock; 27303; 15th February.
Hart, J. R., Ashburton, N.Z.	Sash-lock; 27303; 15th February.
Gunstone, H. H., Sheffield, Eng.	Buffer, &c., for rail- and tram-ways; 27304; 15th February.
Williams, J. D., Melbourne, Vic.	Game*; 27305; 15th February.
Watson, G., Tokomaru, N.Z.	Flax-stripper drum-spindle; 27306; 15th February.
Keppel, J. J., Lawrence, N.Z.	Wire-strainer; 27307; 14th February.
Messerschmidt, C. W. V., Copenhagen, Den.	Bottle, metal capsule for*; 27308; 16th February.
Dunbar, J., Invercargill, N.Z.	Couch; 27309; 12th February.
Pond, S. F., Melbourne, Vic. (*Pond, S.*)	Curd-cutting and other knives; 27310; 16th February.
Steele, G. H. B., Perth, W. Aust.	Spark-arrester*; 27311; 16th February.
Boulter, A. H., Subiaco, W. Aust.	Spark-arrester*; 27311; 16th February.
Hargreaves, J., Leederville, W. Aust.	Spark-arrester*; 27311; 16th February.
Hennequin, E. C., Ilford, Eng.	Music-leaf, &c., turner*; 27312; 19th February, 1909.†
Sims, A. H., Echuca, Vic.	Churn and butter-worker*; 27313; 16th February.
Gardiner, J. C., Montreal, Can.	Multiple-writing machine*; 27314; 16th February.
Fraser, J. C., Coromandel, N.Z.	Water-wheel bucket; 27315; 18th February.
Wilson, J., Auckland, N.Z.	Concrete-road construction*; 27316; 18th February.
Dornbush, J. P., Auckland, N.Z.	Motor; 27317; 18th February.
Trevor, S. R., Auckland, N.Z.	Oil, apparatus for producing; 27318; 18th February.
Jameson, T., Frankton Junction, N.Z.	Burglar alarm; 27319; 18th February.
Lockett, G. H., Gisborne, N.Z.	Closet-seat; 27320; 15th February.
Fiddy, F. C. P., Gisborne, N.Z.	Closet-seat; 27320; 15th February.
Price, E. J., Sydney, N.S.W.	Filter water-tap*; 27321; 17th February.
Considine, M. P., Sydney, N.S.W.	Filter water-tap*; 27321; 17th February.
Cederberg, C., Randwick, Sydney, N.S.W.	Filter water-tap*; 27321; 17th February.

Complete Specifications filed after Provisionals.

LIST of complete specifications filed after provisional specifications, from the 5th to the 18th February, 1910, inclusive:—

No. 25690.—E. A. Earnshaw, life-saving at sea.
No. 25929.—R. Beattie and G. Croxford, snow-board.
No. 25947.—Milburn Lime and Cement Company, Limited, Portland cement manufacture. (F. Oakden.)
No. 26979.—A. J. Cotton, imparting power from motor-car engine.

Notice of Acceptance of Complete Specifications.

Patent Office,
Wellington, 23rd February, 1910.

COMPLETE specifications relating to the undermentioned applications for Letters Patent have been accepted, and are open to public inspection at this office. Any person may, at any time within two months from the date of this *Gazette*, give me notice in writing of opposition to the grant of any such patent. Such notice must set forth the particular grounds of objection, and be in duplicate. A fee of 10s. is payable thereon.

The copies of claims and extracts from the specifications and drawings are merely intended to give some further indication of the invention than is disclosed in the title, and the complete specifications and drawings should be referred to for a description of the invention.

No. 25617.—25th February, 1909.—MARY THERESA BRAIK, of Dunedin, New Zealand, Married Woman. Improved fireless cooker.*

Claims.—(1.) In a fireless cooker of the type described, a dish-supporting frame arranged and adapted to operate substantially as and for the purposes set forth. (2.) A fireless cooker of the type described having a plurality of compartments lined with hay and separated by sheets of felt or brown paper, with independent lids to the compartments seated on bars fixed across the box at the boundaries of the compartments, each of said compartments having a dish-supporting frame therein, and provided with a second lid covering the independent lids, substantially as described. (3.) An improved fireless cooker constructed, arranged, and adapted to operate substantially as and for the purposes set forth.

(Specification, 2s. 6d.)

No. 25670.—11th March, 1909.—TOM ERNEST WOODROFFE, of Cromwell Street, Mount Eden, Auckland, New Zealand, Warehouseman. Improvements in incubators.*

Extract from Specification.—According to my invention water is entirely dispensed with. The eggs are supported upon wires or the like in chambers surrounding a centrally located well in which is placed a lamp which supplies the necessary heat direct within the incubator itself. The bottom of the well, under the lamp, is perforated for the admission of air.

[NOTE.—The above extract from the specification is inserted in place of the claims.]

(Specification, 2s. 6d.)

No. 25683.—12th March, 1909.—AMBROSE RIDD, of Waipuku, New Zealand, Farmer. Improvements in milking-machines.*

Claim.—(1.) In milking-machines, a teat-cup comprised by an outer rigid casing and an inner flexible lining arranged to leave an annular space between it and the casing, and formed with sides gradually increasing in thickness towards the bottom end, and with three projecting ribs upon its internal surface arranged at equal circumferential distances apart, and extending down such surface in parallel helical lines, in combination with means whereby the annular space surrounding the lining is alternately placed in communication with different degrees of air-pressure, substantially as specified.

[NOTE.—Here follow five other claims.]

(Specification, 9s. 6d.)

No. 25706.—18th March, 1909.—ARTHUR REGINALD ANGUS, of Barry Street, Neutral Bay, New South Wales, Australia, Solicitor. Improvements in the running-gear of railway-cars.*

Extract from Specification.—A divided axle or semi-axle for each wheel within independent bearings, one on each side of each wheel, and disposed so that each pair of semi-axles is prevented from departing up or down from the straight line, or practically so, formed by each pair of semi-axles under conditions mentioned, which straight line, or practically so, I term the axial line. And, secondly, a rigid connector or frame for holding or maintaining the bearings of two corresponding semi-axles of a "car" in their proper positions relatively one to the other, and preventing the semi-axles within their bearings from being thrown out of their axial line.

[NOTE.—The above extract from the specification is inserted in place of the claims.]

(Specification, £1 5s.)

No. 25771.—1st April, 1909.—QUENTIN WOODBURY BOOTH, of 22 Brown's Race, Rochester, New York, United States of America, Manufacturer (assignee of Louis William Garnett Flynt, of Rochester aforesaid, Machinist). Improvements in or relating to machines for skiving leather and the like.*

Extract from Specification.—A machine whereby the knife can be maintained at its maximum or proper speed of rotation at all times, and in connection therewith the work-support and feed can be independently governed or varied in its movement, thereby overcoming the objections to the machines heretofore in use.

[NOTE.—The above extract from the specification is inserted in place of the claims.]

(Specification, £2.)

No. 25776.—30th March, 1909.—CHARLES SUTTIE, of Waharoa, New Zealand, Flaxmiller, and MONTAGUE HARRISON WYNYARD, of Auckland, New Zealand, Solicitor. Improvements in apparatus for operating a mechanical flax-catcher.*

Claim.—(1.) In apparatus for operating a mechanical flax-catcher, a spindle carrying or connecting movement to the cam or other contrivance which actually moves the mechanical "catcher," in combination with a loose-driven sleeve faced with teeth revolving round such spindle, a tension-spring exerting pressure on such sleeve, a collar fast to such spindle and having teeth corresponding to the teeth on such sleeve, a collar clamped to such spindle and having a slide-slot cut out of it, a collar loose on such spindle between the last-mentioned two collars having a slide-tooth corresponding with the before-mentioned slide-slot, and having also a stop on its periphery, contacting with a "lift" stop which is raised by communicated movement when flax is fed into the stripper, and a push pin or pins running through the fast collar to the smooth face of the sleeve inside the teeth, substantially as and for the purposes described.

[NOTE.—Here follows one other claim.]

(Specification, 4s. 6d.)

No. 25806.—8th April, 1909.—THOMAS OLDHAM BENNETT, of Greenbank Street, Marrickville, near Sydney, New South Wales, Australia, Mechanical Engineer. Improvements in certain machine sheep-shears.*

Extract from Specification.—The minor short lever is rocker-shaped second-class lever, and has a convexity or fulcrum in a concave recess in the top of the major long lever, and it has its rear end bearing under the end of a tension-screw through a boss on the major lever and obtruding through the top of the machine, and by which a vertical movement is imparted direct to the rear of said tension-lever.

[NOTE.—The above extract from the specification is inserted in place of the claims.]

(Specification, 6s. 6d.)

No. 25822.—8th April, 1909.—WILLIAM PETER SWAN MACGREGOR, of Wendonside, New Zealand, Farmer. Improvements in reels for wire-tighteners.*

Claim.—In combination with wire-tightening devices, the introduction of lugs fixed to or cast integral with the flange of the reel at specifically stated positions, substantially as and for the purposes described in the specification.

(Specification, 1s. 3d.)

No. 25835.—15th April, 1909.—ARTHUR BEVERIDGE, of 111 Lincoln Road, Christchurch, New Zealand, Engineer. Improvements in doors of automatic-stoking furnaces.*

Extract from Specification.—A tube of considerable diameter, or a water-jacket, is fixed along the lower edge of the door.

[NOTE.—The above extract from the specification is inserted in place of the claims.]

(Specification, 2s. 6d.)

No. 25839.—16th April, 1909.—SIDNEY SHERRARD OSBORN, of the Glen Deep, Limited, Germiston, Transvaal, Cyanide-manager. Improvements in tube-mill linings.*

Extract from Specification.—In fitting up the improved liner there is preferably first laid on the interior of the shell a thin layer 4 of cement on to which the other parts of the lining are positioned. Metallic bars of a somewhat flat section are then laid in, alternately flat-wise as indicated by 5, and on edge as shown by numeral 6. Between the bars is placed a preferably thin course 7 of cement.

[NOTE.—The above extract from the specification is inserted in place of the claims.]

(Specification, 4s. 6d.)

No. 25865.—26th April, 1909.—CHARLES ARTHUR BEAUCHAMP PICKARD HAWKINS, of Napier, New Zealand, Motor-garage Proprietor, BERTRAM OGILVIE, of Napier aforesaid, Engineer, and CHARLES JOHN NAIRN, of Pourerere, New Zealand, Sheep-farmer. Improvements in or relating to aeroplanes.*

Claims.—(1.) In aeroplanes, side planes (or ailerons) hinged on each side of the aeroplane and adapted to turn on their hinges in directions longitudinal with the flight of the aeroplane, and connections between the hinged planes on the one side of the aeroplane and those on the other side thereof by means of which the movements of the planes on the one side will be reversely and equally imparted to those on the other, substantially as and for the purposes specified. (2.) The improvements in or relating to aeroplanes, substantially as described and explained, and as illustrated in the drawings.

(Specification, 4s.)

No. 26256.—20th July, 1909.—HAROLD CHARLES L'OSTE ROLFE, of the Equitable Buildings, Collins Street, Melbourne, Victoria, Australia, Manufacturer. An improved automatic air-supplying and carburetting apparatus for illuminating and heating purposes.

Extract from Specification.—One improvement in such an apparatus consists in a liquid seal valve devised for the purpose of allowing the air passing into the air-holder under pressure to be easily admitted and at the same time prevented from leaking back, whilst another improvement consists in the automatic hydrocarbon-feed arrangement as more particularly described.

[NOTE.—The above extract from the specification is inserted in place of the claims.]

(Specification, 5s. 6d.)

No. 26513.—2nd September, 1909.—WILLIAM JOHN PHILIPS, of 451 Elizabeth Street, Melbourne, Victoria, Australia, Business Agent (assignee of James Condy, of 2 Oxford Street, South Yarra, Victoria aforesaid, Agent). Improvements in cooking-utensils, kettles, cake-tins, and the like.

Claim.—In cooking-utensils, kettles, cake-tins, and the like, a perforated metal flange around the bottom of said cooking-utensil or the like, constructed by gripping the bottom of said utensils and a perforated flange in a recess formed in the body of said cooking-utensils, and a lid placed on one side of the top outside the handle, substantially as and for the purposes specified, and as illustrated in the drawings.

(Specification, 2s. 6d.)

No. 26559.—15th April, 1909.—GORDON GEORGE JOHNSTON of Citizens' Chambers, Moore Street, Sydney, New South Wales, Australia, Mining Broker. Improvements in pneumatic tires.

[NOTE.—This is an application under the International and Intercolonial Arrangements, the date given being the official date of the application in Australia.]

Extract from Specification.—These improvements in pneumatic tires comprise the combination with and between the inner tube and the cover of a protector strip or band of greenhide chrome leather or plain leather, or other like material, in one piece of sufficient width to fully cover or line the inner face of the outer cover, and to be turned at either side fully around the bead of the outer cover, and be clipped between said bead and the rim or flange of the wheel, and to be jammed there when the inner tube is inflated.

[NOTE.—The above extract from the specification is inserted in place of the claims.]

(Specification, 3s. 6d.)

No. 26716.—12th October, 1909.—CLAUDE BUCHANAN MONTEATH, of Corner Cecil and Market Streets, South Melbourne, Victoria, Australia, Ironfounder. An improved flushing-cistern.

Extract from Specification.—The central lift bell is constructed with another shallower annular bell about its lower outer surface, while the cistern, which is formed with a circular depression or dish to receive the said two-part bell, has the annular siphon division for the annular bell constructed in one casting with the dish and cistern, the central siphon stand-pipe for the central bell being preferably secured in position as is usual.

[NOTE.—The above extract from the specification is inserted in place of the claims.]

(Specification, 3s. 6d.)

No. 26760.—19th October, 1909.—RUPERT HENRY GILES, Bootmaker, and JOSEPH CHAPMAN RETTER, Blacksmith, both of Otaki, New Zealand. An improved bootmaker's last-stand.

Claim.—(1.) The combination with a bootmaker's stand, of a tongue adapted to fit the lasts, and provided with a threaded shank passed loosely through the stand, and a lock-nut screwed upon such shank, substantially as and for the purposes specified.

(Specification, 2s.)

No. 27010.—7th December, 1909.—OSWALD SILBERRAD, of the Silberrad Research Laboratories, Buckhurst Hill, Essex, England, Doctor of Philosophy. Improvements in the dressing of leather.

Extract from Specification.—The invention consists more specifically in completely removing the fatty, oily, and waxy matters from leather by percolation or extraction with dry solvent-naptha, preferably of low boiling-point, and in then treating the leather with a solution of rubber in naptha or other liquid capable of forming a clear rubber-solution.

[NOTE.—The above extract from the specification is inserted in place of the claims.]

(Specification, 4s.)

No. 27130.—11th January, 1910.—PHILIP MAGNUS, of "Victor," Jackson Street, Northcote, near Melbourne, Victoria, Australia, Rubber Expert. An improved tread for motor-tires and the like.

Claims.—(1.) In an improved tread for motor-tires and the like, a metallic shoe such as A, with upturned and inturned edges and back, substantially as described and for the purpose set forth. (2.) A metallic shoe as claimed in claim 1, in combination with a solid rubber-piece to form the improved tread for motor-tires, as described and illustrated. (3.) In an improved tread for motor-tires and the like, the combination of the parts claimed in claims 1 and 2, together with the use of layers of asbestos, for the purpose set forth, substantially as described, and as illustrated in the drawings.

(Specification, 3s.)

No. 27134.—19th March, 1909.—TRUE HARMON FILES, of 14 Chestnut Street, Everett, Massachusetts, United States of America, Roadman. Improvements in the art of making boots and shoes.

[NOTE.—This is an application under the International and Intercolonial Arrangements, the date given being the official date of the application in the United States of America.]

Extract from Specification.—Indicating sizes or widths, or both, on upper-blanks in any manner by means of code symbols.

[NOTE.—The above extract from the specification is inserted in place of the claims.]

(Specification, 10s. 6d.)

No. 27153.—12th January, 1909.—NOEL RAY STILES, of 34 Leadenhall Street, London E.C., England, Commercial Traveller. Improvements relating to devices for automatically delivering articles.

[NOTE.—This is an application under the International and Intercolonial Arrangements, the date given being the official date of the application in Great Britain.]

Extract from Specification.—The invention consists in an automatic presenting-device, comprising an article-container, a movable receiving and lifting element, a cradle in the container, and means for raising the cradle up through the container so as to select and lift an article into position for removal directly from said cradle by the receiving-element, said means also controlling the movable receiving-element.

[NOTE.—The above extract from the specification is inserted in place of the claims.]

(Specification, 13s.)

No. 27154.—13th January, 1910.—JAMES FOX MELLOR, of Franklin Street, Adelaide, South Australia, Agricultural Engineer (assignee of John Alexander Shearer, of Margate Street, Unley, South Australia, Blacksmith). Improvements in stump-jumping agricultural implements.

Extract from Specification.—According to my invention, in place of the spiral spring and connections hitherto employed, the rising beam is maintained in working position by means of a helical or clock spring, suitably mounted and attached, one end of the spring being secured to or engaging through suitable connections some portion of the implement-frame, and the other end being secured to or engaging through suitable connections some portion of the rising beam, so that the power of the spring operates between the two.

[NOTE.—The above extract from the specification is inserted in place of the claims.]

(Specification, 7s. 6d.)

No. 27158.—13th January, 1910.—WILLIAM FISHER, of Hook, Waimate, Canterbury, New Zealand, Farmer. An improved composition for the manufacture of cooling-vessels.

Claims.—(1.) A composition for the manufacture of cooling-vessels, composed of a mixture of plaster-of-paris, alum, lime, and salt, with water, substantially as specified. (2.) A composition for the manufacture of cooling-vessels, composed of a mixture of plaster-of-paris, alum, lime, and salt, with water, in the relative proportions.

(Specification, 1s. 6d.)

No. 27168.—17th January, 1910.—BENJAMINE WALLIS, of Petone, Wellington, New Zealand, Cabinetmaker. Improved picture-mount cutter.

Claim.—An improved picture-mount cutter consisting in the combination of a block having grooves of a tee (T) section at right angles, and a rod mounted in the block by means of small blocks of wood or metal running in the grooves, upon which is adjustably fixed the cutter-head, all substantially as described, and shown on the drawings.

(Specification, 1s. 6d.)

No. 27170.—18th January, 1910.—WILLIAM EDWARD BANDFIELD, of 70 Tettenhall Road, Wolverhampton, Stafford, England, Engineer. Improvements in the attachment of telegraph and similar line wires to insulators.

Extract from Specification.—A substantially U-shaped clip adapted to partially surround the insulator, and having forked ends within which the line-wire is introduced, and clamped by wedging-pieces in a manner causing the line-wire to frictionally grip the insulator at that part of it between the forked ends, at the same time the clip to be pulled tight around or on to said insulator, said wedging-action causing a firm affixment of the clip and line-wire, and providing a slight cranking in the line-wire between the forked ends. The clip may be made to encircle the insulator between two larger diameters, to thereby provide so that the said clip is held in position vertically or axially of the insulator. The clip at its ends has a pair of forks to receive the line-wire, and closed forks or boxes to receive the wedging-pieces; and said clip can be conveniently made from a flat strip of metal suitably shaped, and provided near each end with an elongated slot which on bending the particular end of the fork will form a pair of open forks to receive the line-wire. and a closed box to receive the wedging-pieces.

[NOTE.—The above extract from the specification is inserted in place of the claims.]

(Specification, 5s.)

No. 27179.—19th January, 1910.—JOHN GRAY MITCHELL, of Prell's Buildings, Queen Street, Melbourne, Victoria, Australia, Accountant (assignee of William Haslam, of corner Smith Street and Victoria Parade, Fitzroy, Melbourne aforesaid, Engineer). An improved attachable resilient heel for boots and shoes.

Claims.—(1.) In an attachable resilient heel for boots and shoes, a resilient heel-pad having a depending circular member provided with an externally formed worm or thread, a correspondingly threaded hole in the heel, and means for locking the pad to the heel comprising a stud on the one part and a hole in the other part, as substantially described.

[NOTE.—Here follow three other claims.]

(Specification, 5s.)

No. 27182.—18th January, 1910.—HILDEBRANDE TERTIUS HILL, of Takapuna, near Auckland, New Zealand, Farmer. Improved swingletree attachments.

Claims.—(1.) The improved swingletree attachments specified, consisting of the outer and inner frames, the swingletrees fitted thereto by bolts, and the means provided for attaching the same to the power used and the tool, machine, or vehicle to be drawn, in the manner and for the purpose set forth, as described and illustrated. (2.) The application, arrangement, and combination of the parts specified in the manner and for the purpose set forth, as described and illustrated.

(Specification, 3s.)

No. 27184.—20th January, 1910.—ARTHUR ECKERSLEY, of 628 Bourke Street, Melbourne, Victoria, Australia, Chemist. An improved combined filling-plug and safety-valve for reservoirs containing liquids or gases under pressure.

Claims.—(1.) A combined filling-plug and safety-valve consisting of a plug as 1 adapted to be inserted into the receptacle containing the liquid or gases under pressure, and a smaller plug as 2 adapted to be screwed into the lower end of the first plug, a thin metal or other diaphragm as 4 being inserted between the two plugs, and a washer as 5 being provided for the lower plug to bear against a discharge-passage as 6 and 7 being formed through each plug, substantially as and for the purposes specified, and as illustrated in the sheet of drawings.

[NOTE.—Here follow two other claims.]

(Specification, 2s. 6d.)

No. 27188.—21st January, 1910.—DAVID MCCRAE, of 8 Farish Street, Wellington, New Zealand, Merchant. An improved mattress.

Extract from Specification.—According hereto my mattress is made with the usual outer cover, but stuffed with two

independent materials having different natures, densities, or consistencies, the materials being kept in separate layers, the harder or less resilient material being used as a core or central layer, around which the softer or more silient material is arranged in layers. Materials suitable for my purpose are kapoc and flax or tow. The flax is employed as a central layer or core surrounded by kapoc, which forms layers above and below and upon the sides and ends of the flax.

[NOTE.—The above extract from the specification is inserted in place of the claims.]

(Specification, 2s. 6d.)

No. 27189. — 19th January, 1910. — JOHN MCLAREN and HENRY MCLAREN, both of Midland Engine Works, Leeds, England, Engineers. Improvements in ploughs operated by steam or other motive power.

Claims. — (1.) In ploughs, a leading-wheel mounted on an arm on a screwed spindle passing through a nut carried in a bearing for the said spindle, the means for rotating the said nut for raising and lowering the wheel, and means for locking the said nut and for partially rotating the said spindle for steering, substantially as described. (2.) In ploughs having two or more plough-carrying frames in series, means for effecting the steering of a following set of ploughs from the preceding set of ploughs, the said means consisting of a tiller connected to the steering-lever of one set of ploughs and passed through a vertical guide carried by the frame of the other plough, substantially as described.

[NOTE.—Here follow nine other claims.]

(Specification, 14s. 6d.)

No. 27196.—25th January, 1910.—GRANT HAMMOND, of 150 Oakland Terrace, Hartford, Connecticut, United States of America, Mechanical Engineer, and THOMAS DARLINGTON, M.D., of 48 West Fifty-ninth Street, New York, United States of America, Physician. Improvement in automatic guns.

Extract from Specification.—Our invention relates to firearms, and particularly to an attachment to the Springfield rifle or other rifles of like type now in use; in other words, the present invention comprehends and includes a mechanism which is capable of being attached to the guns now in use as well as to other types of guns hereinafter constructed, and which mechanism is designed to make such guns automatic in action, and to convert the ordinary magazine gun into an automatic gun wherein the power required for rotating and reciprocating the breech-bolt, and retracting the firing-bolt against the tension of its main spring, is derived from the expansive force of the gases of an exploded charge forcing a slidable mechanism forwardly and storing power in a spring or springs sufficient to turn and reciprocate the breech-bolt. The primary object of the invention is to provide a mechanism of simple character which is capable of attachment to existing types of magazine-guns, and which may be applied thereto at slight expense and with but little alteration of such guns, whereby the gun may be converted into an automatic gun when desired. A further object of the invention is to provide means whereby the automatic attachment may be instantly thrown into or out of connection with the gun-action to speedily convert the gun from a single-firer to automatic, and *vice versa*, and to semi-automatic.

[NOTE. — The above extract from the specification is inserted in place of the claims.]

(Specification, £3.)

No. 27203.—26th January, 1910.—LOUISA DILLIMORE, of Thames, New Zealand, Domestic Duties. Improvements in safety hat-pins.

Claim.—In safety hat-pins of the class described, the combination of a pair of pins arranged with the head of each pin adjacent to the point of the other, and having the protecting knob for each point attached to the head of the other pin by means of flexible connections, substantially as and for the purposes specified.

(Specification, 2s.)

No. 27215.—27th January, 1910.—JOHN WILLIAM HARDLEY, of Auckland, New Zealand, SAMUEL HARDLEY, Jun., of Hamilton, Auckland, New Zealand, and CHARLES EDWARD HARDLEY, of Auckland aforesaid, Metal-manufacturers. An improved bracket for spouting.

Claims.—(1.) The improved bracket for spouting specified, adapted to hold the spouting with a strong grip, and constructed in the manner and for the purpose set forth, as described and illustrated. (2.) In the improved bracket for spouting specified, the upper end of the same given an S formation, for the purpose set forth, as described and illustrated.

(Specification, 2s. 3d.)

No. 27224.—29th January, 1910.—JAMES DEWER HUNTER, of Moray Place, Dunedin, New Zealand, Engineer and Dairy-plant Manufacturer. Improved fixing for carrying the brush used in pasteurising-apparatus.

Claims.—(1.) In pasteurising-plant, in combination with the inner containing cylinder of same, the brush that keeps the inner surface clean and free from incrustation of any of the contents so hinged that it will bear lightly and evenly on the said inner surface of the inner cylinder even if there are inequalities in same, all substantially as shown on the drawing, and as described and explained. (2.) In pasteurising-plant, in combination with the inner surface or ends of the inner or containing cylinder, the brush that keeps the said inner surface clean and free of any incrustation of any of the contents so hinged and reinforced on said hinges by springs either in the hinges or pressing on the brush or frame so as to keep the said brush pressing more strongly on the said surface, all substantially as set forth.

(Specification, 2s.)

No. 27226.—12th February, 1909.—JAMES NICOLSON BAILEY, of 34 Harriet Street, Stretford, Lancashire, England, Engineer. Improvements in and relating to the prevention of leakage in pneumatic tires and other articles containing gas or fluid under restraint.

[NOTE.—This is an application under the International and Intercolonial Arrangements, the date given being the official date of the application in Great Britain.]

Claims.—(1.) A means of preventing leakage of air, gas, or fluid from hollow tires or the like by plates, flakes, or scales suspended in or in conjunction with a fluid vehicle, the said plates, flakes, or scales independently or conjointly covering the orifice or orifices after the nature of a non return valve, and being held in position by the constrained air, gas, or fluid, substantially as described.

[NOTE.—Here follow two other claims.]

(Specification, 6s. 6d.)

No. 27234.—31st January, 1910.—ARTHUR RICHMOND CHRISTIAN, of Christchurch, New Zealand, Pattern-maker. An improved convertible article of furniture.

Claims.—(1.) A device of the class described, comprising a rectangular box provided at its upper end with a commode-seat, a top or seat detachably secured upon such commode-seat, a downwardly hinging door at the front of the box through which is inserted a rectangular pan, and means for supporting such pan in the interior of said box with its upper edge against the under side of the commode-seat, substantially as and for the purpose set forth. (2.) The improved convertible article of furniture for use as coal-cabinet, night commode, music-stool, and the like, substantially as herein described and explained, and as illustrated in the drawings.

(Specification, 3s.)

No. 27242.—3rd February, 1910.—ROBERT CARRUTHERS, of Levin, New Zealand, Plumber. An improved milk-can.

Claims.—(1.) In a milk-can of the class described, making the bottom rounded to facilitate cleaning, and seamed and grooved in such a manner as to make a ridge which prevents

the bottom hoop from slipping up. (2.) In a milk-can, forming the lid with a hollow surface to catch the dust and mud thrown up by cart-wheels, and having a plug in the centre which is inserted after the lid is put on and which prevents the said lid from being removed until the plug is taken out, and which also prevents the splashing out of can.

(Specification, 1s. 6d.)

No. 27253.—4th February, 1910.—NORTON SYDNEY CORNEY, of 518 St. Catherine Street West, Montreal, Canada, Agent. Butter-blending machine.

Extract from Specification.—The invention consist essentially of an outer receptacle having an inner receptacle spaced therefrom, said inner receptacle being provided with a stationary dasher, and a revolving or movable dasher co-operating with the stationary dasher by means of a driving mechanism, preferably in the form of a gear-wheel, located at the top of the device.

[NOTE.—The above extract from the specification is inserted in place of the claims.]

(Specification, 6s. 6d.)

No. 27269.—5th February, 1910.—MICHAEL ALFRED POPKESS, of 1121 R. A., Long Building, Kansas City, Jackson County, Missouri, United States of America, Engineer. Process of surfacing roadways and the like.

Extract from Specification.—The method consists in spraying or injecting the binder, which may be asphalt or any bituminous mixture, while the earthy material is in a state of suspension.

[NOTE.—The above extract from the specification is inserted in place of the claims.]

(Specification, 5s.)

No. 27273.—9th February, 1910.—Robert May, of Day Street, Drummoyne, Sydney, New South Wales, Australia, Agent, FRANK EDWIN MAY, of Lang Street, Mosman, Sydney aforesaid, Furniture Broker, and ALFRED WILSON RAILTON, of Military Road, Mosman, Sydney, aforesaid, Cabinetmaker. A folding corner wardrobe.

Extract from Specification.—It consists of two hinged wing-pieces or supporting-frames, to one of which are attached by hinges top and bottom pieces, which, besides forming the securing-parts, may serve the purpose of shelves. They are provided with stud-pins or dowels fitting into holes in the frames, and are secured by suitable fastenings to keep them in their respective positions. The frames, which are mitred at their joining-edges, are, by a simple method of outfolding and infolding, readily made to assume proximate flat positions, with the shelves outwardly overlaid upon the contiguous frame.

[NOTE.—The above extract from the specification is inserted in place of the claims.]

(Specification, 4s. 6d.)

Copies of drawings may be obtained at the uniform price of 1s. each. In exceptional cases this price may be increased at the discretion of the Office.

An asterisk (*) denotes the complete specification of an invention for which a provisional specification has been already lodged.

NOTE.—The cost of copying the specification has been inserted after the notice of each application. An order for a copy or copies should be accompanied by a post-office order or postal note for the cost of copying.

The date of acceptance of each application is given after the number.

Extracts from the drawings accompanying the foregoing complete specifications appear at the end of this *Gazette*.

J. C. LEWIS,
Registrar.

Provisional Specifications accepted.

Patent Office,
Wellington, 23rd February, 1910.

APPLICATIONS for Letters Patent, with provisional specifications, have been accepted as under:—

No. 26970.—H. C. Carrington, building-bracket.
No. 27106.—G. Anderson, T. Pargeter, and E. Davis, water-heater.
No. 27123.—H. B. Hughes, pump-connection.
No. 27181.—W. T. House, motive power.
No. 27194.—S. Roche, rheumatism, &c., cure.
No. 27195.—United Shoe Machinery Company, nail-feeding device. (J. G. Gibson and G. Pegg.)
No. 27205.—S. V. Fulljames, tank-flange.
No. 27206.—S. C. Parlour, flax-catcher.
No. 27208.—W. A. McKay, water-wheel.
No. 27212.—W. Hoyland, metal-clip system.
No. 27216.—W. Hoyland, metal-clip detachable-box construction.
No. 27218.—H. Dempsey, furniture-reviver.
No. 27219.—R. Ogilvie, speed-gear.
No. 27220.—J. Bain, horse-hoe draught-attachment.
No. 27222.—E. N. Lanchester, paint-brush binder.
No. 27227.—E. Nevill, aeroplane.
No. 27229.—W. McLeod, seat.
No. 27232.—E. Larcomb, caisson for building submerged walls, &c.
No. 27233.—R. D. Haworth, knock-down box.
No. 27238.—United Shoe Machinery Company, boot-sole machine. (F. H. Perry.)
No. 27239.—United Shoe Machinery Company, boot-edge-trimming and shoe-sole-finishing machine. (F. H. Perry.)
No. 27240.—United Shoe Machinery Company, shoe-upper-lacing machine. (C. S. Wells and W. W. Darnill.)
No. 27243.—T. Stevenson and T. Falconer, chaffcutter-knife sharpener.
No. 27246.—R. Lambie, jun., and G. S. Edlin, exhausting air.
No. 27247.—H. J. Vanstone, bottle-stopper.
No. 27251.—S. G. Roseman, broom or brush manufacture.
No. 27252.—K. Sutherland, telescope.
No. 27254.—J. E. Taylor, concrete pillar.
No. 27255.—E. A. Earnshaw, propeller life-guard.
No. 27257.—J. V. Price, relief-block printing.
No. 27258.—P. and D. Duncan, Limited, plough. (J. Keir.)
No. 27261.—E. H. Browne, wire-strainer.
No. 27262.—H. H. Wallace, horse and cattle throwing and securing apparatus.
No. 27263.—J. H. Saunders, pump-piston bucket.
No. 27264.—J. H. Saunders, pumping, &c., gearing.
No. 27266.—G. Nielsen and T. J. Wilton, power transmission variable speed mechanism.
No. 27268.—G. J. Colthurst, liquid shine.
No. 27271.—E. F. Hume, corset.
No. 25277.—T. J. Pickering, photograph-printing apparatus.
No. 27280.—F. G. Willcocks, milking-machine pulsator.
No. 27283.—D. Gilmour, step-ladder.
No. 27286.—A. Simonson and G. King, appliance for filling articles with kerosene, &c.
No. 27287.—A. Simonson and G. King, music-holder.
No. 27290.—A. H. Hansen, animal-leg fastener.

[NOTE.—Provisional specifications cannot be inspected, or their contents made known by this office in any way, until the complete specifications in connection therewith have been accepted.]

Letters Patent sealed.

LIST of Letters Patent sealed from the 29th January to the 10th February, 1910, inclusive:—

No. 24771.—G. W. Gough, book-support.
No. 24960.—A. E. Woolley, dust, draught, and rain excluder.
No. 25107.—E. W. Hursthouse, lamp-pillar.
No. 25115.—Auckland Sewing Machine Company, Limited, sewing-machine. (W. T. Auckram.)
No. 25123.—F. Torrington, plunger for aerated-water apparatus.
No. 25126.—J. Gray, wheel-lubricator.
No. 25136.—J. Lewis, acetylene-gas generator.
No. 25167.—H. Smart, spouting-bracket.
No. 25171.—J. Macmeikan, meat, &c., cooling process. (R. Rayson.)
No. 25177.—R. A. Wiggins, milking-machine.
No. 25204.—United Shoe Machinery Company, lasting-machine. (M. Brock.)

No. 25212.—J. Ross, transferring clothes from washing-boiler, &c.

No. 25269.—C. Suttie and M. H. Wynyard, flax-catcher.

No. 25305.—United Shoe Machinery Company, leather-skiving machine. (A. E. Jerram, A. Bates, and J. Gouldbourn.)

No. 25315.—United Shoe Machinery Company, boot-machine positioning-apparatus. (A. Bates.)

No. 25316.—United Shoe Machinery Company, boot-machine jack. (C. S. Wells.)

No. 25317.—United Shoe Machinery Company, boot-sole machine. (F. E. Bertrand.)

No. 25318.—United Shoe Machinery Company, heel-finishing machine. (A. Bates.)

No. 25386.—H. A. Nicholson, beating-bar.

No. 25387.—H. A. Nicholson, flax-stripper.

No. 25413.—United Shoe Machinery Company, boot-fastening-inserting machine. (L. A. Casgrain.)

No. 25414.—United Shoe Machinery Company, pressure-applying machine. (E. N. Preble.)

No. 25415.—United Shoe Machinery Company, lasting, &c., machine. (W. O. Wheeler, E. E. Winkley, and J. C. Smith.)

No. 25416.—United Shoe Machinery Company, boot and shoe machine. (K. Engel and L. M. Brown.)

No. 25417.—United Shoe Machinery Company, boot-sole-trimming, &c., machine. (W. G. Eaton.)

No. 25664.—C. C. Wakefield, calcium-carbide treatment.

No. 25761.—W. H. Johnson, reinforcing materials or bonds for brickwork.

No. 25889.—E. L. Pearse, bicycle toe-clip.

No. 25894.—H. McMurdie, boiler-feeding appliance. (W. B. D. Ponninghaus.)

No. 25938.—H. G. Wells and A. Anderson, jute-bagging manufacture.

No. 26095.—T. P. Smith and C. J. Maclean, water-closet cistern.

No. 26097.—Marconi's Wireless Telegraph Company, Limited, wireless telegraphy. (G. Marconi.)

No. 26198.—W. H. Hennah and A. K. W. Rissel, indicating a ship's deviation from its course.

No. 26199.—W. H. Hennah and A. K. W. Rissel, recording and gauging a ship's deviation from its course.

No. 26271.—J. M. Lynch, die-making method.

No. 26348.—E. Turpin, sharpening chaffcutter-knives.

No. 26356.—C. S. Beilby, sluice-valve.

No. 26407.—C. A. la Point and W. F. Dawson, concentrator.

No. 26408.—J. B. de Alzugaray, metal-extraction.

No. 26410.—W. J. Butler, sewing-machine.

No, 26465.—W. Christian, anti-corrosive and anti-fouling compound.

No. 26506.—F. C. Lynde and C. V. Haworth, gas-production.

No. 26507.—W. J. Price and D. I. Bridge, railway coupling.

No. 26508.—J. P. H. Lund, steering and controlling device for screw-propelled vessels.

No. 26537.—N. Ogden, closet-disinfector.

No. 26547.—F. L. Alley, beating and finishing machine.

No. 26554.—T. Mustad, intermittent gas-supply for illuminated signs.

No. 26556.—H. Siegwart, concrete-cylinder-forming apparatus.

No. 26557.—C. E. Hibberd, coin-freed mechanism.

No. 26558.—J. R. Williams, H. W. Bradley, and B. Bradley, obtaining zinc or copper from complex ores.

No. 26580.—J. L. Buchanan, soap-manufacture.

No. 26592.—E. L. Holly and A. E. Radford, collapsible crate.

No. 26594.—T. Scheie, traction-engine-wheel rim.

No. 26603.—H. L. Blackwell, body-belt.

No. 26624.—United Shoe Machinery Company, pegging-machine. (J. F. Davey.)

No. 26630.—J. S. Forbes, heating and sterilising liquids.

No. 26631.—J. Gill, briquetting pulverised coke, &c.

No. 26632.—J. T. Hunter, casting stereotype printing-plates. Printing Machinery Company, Limited. (H. A. W. Wood.)

No. 26647.—J. T. Hunter, locomotive-boiler smoke-box. (R. F. Thompson.)

No. 26648.—F. C. W. Timm, metal-production.

No. 26650.—S. J. Phillips, cutting and cauterising device.

No. 26651.—Hon. C. A. Parsons, turbine.

No. 26656.—R. W. Millar and H. B. Wade, milking-apparatus.

No. 26664.—G. Huie and J. Glassop, collapsible crate for rabbits, &c.

No. 26682.—T. M. Smith, invalid-lifter.

No. 26730.—W. Stansfield and J. J. Hatt, magnet windings of electro-magnetic apparatus.

No. 26746.—G. Wardle, gas-burner.

No. 26748.—E. L. Holly, knee-grip attachment to milking-bucket.

No. 26767.—G. G. Tarri, channel- and gutter-cleaning implement. (G. E. Bunning.)

Letters Patent on which Fees have been paid.

[NOTE.—The dates are those of the payments.]

SECOND-TERM FEES.

NO. 20692.—J. Robertson and W. C. Wheeler, skim-milk delivery-box and pump. 7th February.

No. 20811.—E. T. C. Firth, moulding-press for making bricks. 9th February, 1910.

No. 20821.—G. F. Hutchinson, acetylene-generator. 9th February.

No. 22508.—M. Audiffren and the Société des Etablissements Singrun, refrigerating-machine. 16th February.

THIRD-TERM FEES.

No. 15964.—C. Ridd and C. E. Young, probe for animal-teats. 10th February.

No. 16133.—Sir W. G. Armstrong Whitworth and Company, Limited, buffer-stop. (R. Wright.) 16th February.

No. 16043.—T. Willmot and M. T. Morgan, wooden-block coating. 8th February, 1910.

Subsequent Proprietors, &c., of Letters Patent registered.

[NOTE.—The name of the former proprietor is given in brackets; the date is that of registration.]

EVELYN EMMA KERR, of Dunedin, New Zealand, Dressmaker, registered as proprietor of the following patents for the Provincial District of Otago and Southland (excepting the Counties of Southland, Fiord, and Wallace, and so much of the County of Tuapeka as is within the Glenkenich Survey District and within the Survey Districts of Greenvale and Crookston):—

No. 14058.—Dress-chart. [E. Langer.] 10th February, 1910.

No. 23621.—Dress-chart. [J. T. Hunter—I. Charles.] 10th February, 1910.

No. 17982.—The Waihi Grand Junction Gold Company, Limited, a company duly incorporated and having its head office at 18 Finsbury Circus, London, England, and its registered office in New Zealand at Fort Street, Auckland, New Zealand, *registered as licensees*, material-circulator. [F. C. Brown and S. D. McMiken.] 10th February, 1910.

The New Zealand Steel Fencing Company, of 20 Hunter Street, Wellington, New Zealand, registered as proprietors of following patents:—

No. 23303.—Tubular fence-dropper. [H. C. L. Rolfe.] 12th February, 1910.

No. 25883.—Fence-dropper. [A. J. Bedford and H. C. L. Rolfe.] 12th February, 1910.

No. 25910.—Metal post for wire fence. [H. C. L. Rolfe.] 12th February, 1910.

No. 26557.—The Hibberd Prepayment Machine Syndicate, Limited (incorporated in New Zealand), of Queen Street, Auckland, New Zealand, and of 47 Victoria Street, Westminster, London S.W., England, coin-freed mechanism. [C. E. Hibberd.] 16th February, 1910.

No. 25026.—Herbert Watkins-Pitchford, of Pietermaritzburg, in the Colony of Natal, a Fellow of the Royal College of Veterinary Surgeons, production of predigested foods, registered as proprietor of one-half share. [W. Fowles.] 17th February, 1910.

No. 25889.—Frank George Reid, of Petone, New Zealand, Saddler, bicycle-pedal toe-clip. [E. L. Pearse.] 18th February, 1910.

No. 26632.—Printing Machinery Company, Limited, of 188 Fleet Street, London, England, casting stereotype printing-plates. [J. T. Hunter—Printing Machinery Company, Limited—H. A. W. Wood.] 18th February, 1910.

No. 26647.—Robert French Thompson, of 88 Cromwell Road, Wimbledon Road, Wimbledon, Surrey, England, Engineer, smoke-box of boiler of locomotive type. [J. T. Hunter—R. F. Thompson.] 18th February, 1910.

Applications for Letters Patent abandoned.

LIST of applications, with which provisional specifications only have been filed, abandoned (*i.e.*, complete specifications not lodged) from the 5th to the 18th February, 1910, inclusive :—

No. 25661.—W. I. Aston, horse-collar.
No. 25789.—G. H. Buckeridge, pillow cover or slip.
No. 25790.—E. F. Jones, safety-guard for tram trolly-wheel.
No. 25791.—T. W. Edlin, bicycle-brake.
No. 25797.—J. O. Sullivan, military accoutrement, &c.
No. 25805.—A. D. Stubbs and J. Robertson, making holes in tins.
No. 25809.—H. Fisher, ventilating-device.
No. 25815.—S. J. Lawrence and T. Daniel, discovering punctures in tires.
No. 25817.—E. Nesbitt, bodice.
No. 25828.—J. R. Davies, gas.
No. 25831.— Alcock and Company Proprietary, Limited, timber-drying process. (A. U. Alcock.)
No. 25834.—A. A. W. Cameron, cover for milk-can.
No. 25843.—D. J. Whelan, vehicle-brake.

Applications for Letters Patent void.

APPLICATIONS for Letters Patent, with which complete specifications have been lodged, void owing to non-acceptance of such complete specifications, from the 5th to the 18th February, 1910, inclusive :—

No. 25195.—F. Lennard, rotary engine.
No. 25222.—J. E. Owen, block or tile for sewer.

Applications for Letters Patent lapsed.

APPLICATIONS for Letters Patent lapsed, owing to Letters Patent not being sealed, from the 5th to the 18th February, 1910, inclusive :—

No. 24776.—T. Martyn, billiard-table.
No. 24781.—T. Martyn, weather-boarding for buildings.
No. 24785.—A. M. Perry, cycle mud-guard.
No. 24797.—C. S. Elmsby, J. H. R. Taylor, and P. Bates, spouting-bracket.
No. 24799.—C. J. Sloman, breeching and kicking-strap.

Letters Patent void.

LIST of Letters Patent void through non-payment of renewal fees, and through expiry of term of fourteen years, from the 5th to the 18th February, 1910, inclusive :—

THROUGH NON-PAYMENT OF SECOND-TERM FEES.

No. 20282.—J. G. Oates, sporting-telegraph.
No. 20290.—G. J. Henderson, making filled capsules.
No. 20291.—H. Cliff, J. C. Bunting, and F. E. Cliff, chaff-cutting machine.
No. 20292.—P. Y. Harrison and R. H. Southall, top piece for boot and shoe heel.
No. 20294.—W. A. H. Cameron and J. W. Marshall, washing drinking-glasses.
No. 20296.—W. C. Page, securing vehicle-wheels upon their axles.
No. 20307.—P. Mullins, playing-cards.
No. 20310.—A. E. G. Bennett, shirt, &c., cuff.
No. 20312. — The Apostles Bread Company, Limited, separating the floury constituents of middlings. (S. B. Apostoloff).
No. 20316.—T. H. Mapp, forage-treatment.
No. 20326.—D. Fisher and A. W. I. Macansh, acetylene-gas generator and lamp. (T. H. Hawkins.)
No. 20327.—E. J. Martin and A. C. Sutton, metallic overlay for process block.
No. 20329.— T. Dugdale, rain-water spout, head, and strainer.
No. 20333.—W. McIntyre, coal, &c., boring drill. (J. Smith.)

THROUGH NON-PAYMENT OF THIRD-TERM FEES.

No. 15603.—The American Tobacco Company, cigarette-machine. (J. Wojciechowski.)
No. 15617.—H. Smith-Wainwright, spark-arrester, &c.
No. 15662.—D. R. S. Galbraith and W. Steuart, reduction of ironsand, &c.

THROUGH EXPIRY OF TERM.

No. 8267.—J. S. Detrick, cigarette-machine.

Design registered.

A DESIGN has been registered in the following name on the date mentioned :—

No. 500.—Stanley Mullen Proprietary, Limited, of 234 Flinders Lane, Melbourne, Victoria, Music and Post-card Importers and Publishers. Class 5. 20th January, 1910.

Applications for Trade Marks filed.

LIST of applications for registration of Trade Marks filed from the 5th to the 18th February, 1910, inclusive :—

No. 8539.—4th February.—M. Dooley, Dunedin, N.Z. Class 2.

No. 8540 and 8541.—4th February.—R. Harper and Co. Proprietary, Limited, Melbourne, Vic. Classes 42 and 47.

No. 8542.—5th February.—Union Oil, Soap, and Candle Company, Limited, Auckland, N.Z. Class 50.

No. 8543.—7th February.—Whittome, Stevenson, and Co., Auckland, N.Z. Class 42.

No. 8544.—8th February.—R. S. Black, Dunedin, N.Z. Class 13.

No. 8545.—9th February.—R. R. Parnham, Devonport, N.Z. Class 42.

No. 8546.—9th February.—A. Boake, Roberts, and Co., Limited, London, Eng. Class 42.

No. 8547.—9th February.—W. P. Henderson, Palmerston North, N.Z. Class 3.

No. 8548.—9th February.—A. Usher and Co., Edinburgh, Scot., and London, Eng. Class 43.

No. 8549.—9th February.—F. E. and P. A. Myers, Ashland, U.S.A. Class 6.

No. 8550.—9th February.—R. Robertson and Co., Vancouver, B.C. Class 42.

No. 8551.—11th February.—Sharland and Co., Limited, Auckland, N.Z. Class 3.

No. 8552.—12th February.—W. S. Ayson, Dunedin, N.Z. Class 2.

No. 8553.—12th February.—Lyra Lead Pencil Company, Nürnberg, Bavaria. Class 39.

No. 8554 and 8555.—14th February.—Brett Printing and Publishing Company, Limited, Auckland, N.Z. Class 39.

No. 8556.—14th February.—Ellis and Manton, Wellington, N.Z. Class 47.

No. 8557.—15th February.—P. Hayman and Co., Wellington, N.Z. Class 9.

No. 8558.—15th February.—W. H. Smith and Son, London, Eng. Class 39.

No. 8559.—15th February.—J. Munro and Son, Limited, Leith, Scot. Class 43.

Nos. 8560, 8561, and 8562.—15th February.—Alabastine Company, British, Limited, London, Eng. Class 1.

No. 8563.—16th February.—F. Cole, St. Albans, N.Z. Class 50.

No. 8564.—16th February.—D. MacLeod and Co., Melbourne, Vic. Class 3.

No. 8565.—17th February.—J. C. Wilson, Ponsonby, N.Z. Class 1.

Nos. 8566, 8567, and 8568.—17th February.—Foster McClelland Company, Sydney, N.S.W. Class 3.

No. 8569.—18th February.—N. H. King, Feilding, N.Z. Class 48.

No. 8570.—18th February.—Union Oil, Soap, and Candle Company, Limited, Auckland, N.Z. Class 50.

Applications for Registration of Trade Marks.

Patent Office,
Wellington, 23rd February, 1910.

APPLICATIONS for registration of the following Trade Marks have been received. Notice of opposition to the registration of any of these applications may be lodged at this office within two months of the date of this *Gazette*. Such notice must be in duplicate, and accompanied by a fee of £1.

No. of application: 7813.

Date: 29th January, 1909.

TRADE MARK.

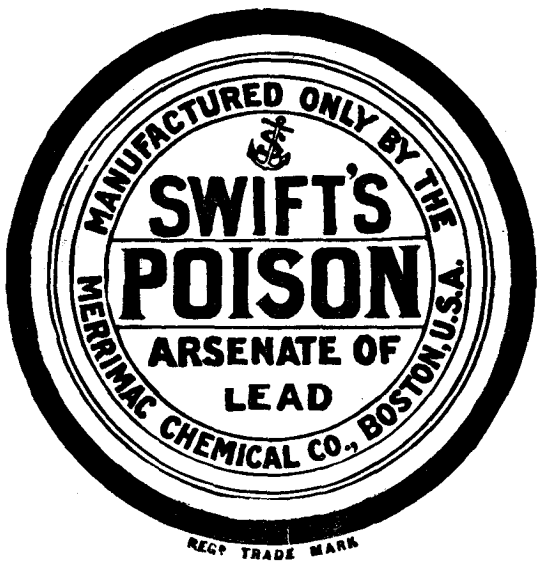

The essential particular of this trade mark is the distinctive label.

NAME.

MURRAY, ROBERTS, AND CO., of Featherston Street, Wellington, in the Dominion of New Zealand.

No. of class: 2.

Description of goods: Swift's arsenate of lead.

No. of application: 8479.

Date: 4th January, 1910.

TRADE MARK

NAME.

SCHWEPPES, LIMITED, of 63 Foveaux Street, Sydney, in the State of New South Wales, Commonwealth of Australia, and elsewhere, Manufacturers and Bottlers.

No. of class: 44.

Description of goods: Mineral and aerated waters, natural and artificial.

No. of application: 8480.

Date: 4th January, 1910.

TRADE MARK.

The essential particular of this trade mark is the representation of a red seal suspended by a coloured ribbon; and any right to the exclusive use of the added matter is disclaimed.

NAME.

SCHWEPPES, LIMITED, of 63 Foveaux Street, Sydney, in the State of New South Wales, Commonwealth of Australia, and elsewhere, Manufacturers and Bottlers.

No. of class: 42.

Description of goods: Cordials (non-alcoholic).

No. of application: 8481.

Date: 4th January, 1910.

TRADE MARK.

(The mark as shown in preceding notice, No. 8480.)

The essential particular of this trade mark is the representation of a red seal suspended by a coloured ribbon; and any right to the exclusive use of the added matter is disclaimed.

NAME.

SCHWEPPES, LIMITED, of 63 Foveaux Street, Sydney, in the State of New South Wales, Commonwealth of Australia, and elsewhere, Manufacturers and Bottlers.

No. of class: 44.

Description of goods: Mineral and aerated waters (natural and artificial).

No. of application: 8513.

Date: 25th January, 1910.

TRADE MARK.

The essential particulars of this trade mark are the device and the word "Triumph"; and applicants disclaim any right to the exclusive use of the added matter, except their name and address.

NAME.

TRIUMPH CYCLE COMPANY, LIMITED, of Coventry, England (represented by Adams, Limited, whose registered office is situated in Christchurch, in the Dominion of New Zealand).

No. of class: 22.

Description of goods: Motor-bicycles and motor-vehicles.

No. of application: 8527.

Date: 1st February, 1910.

TRADE MARK.

The essential particulars of this trade mark are the device and the word "Health"; and any right to the exclusive use of the added matter is disclaimed.

NAME.

CROCKETT AND JONES, of Corner of Magee Street and Perry Street, Northampton, England, Manufacturers.

No. of class: 50.

Description of goods: Boot-polish.

No. of application: 8528.

Date: 1st February, 1910.

TRADE MARK.

The essential particulars of this trade mark are the device and the words "Non Tread Over"; and any right to the exclusive use of the added matter is disclaimed.

NAME.

CROCKETT AND JONES, of Corner of Magee Street and Perry Street, Northampton, England, Manufacturers.

No. of class: 50.

Description of goods: Boot-polish.

No. of application: 8530.

Date: 1st February, 1910.

TRADE MARK.

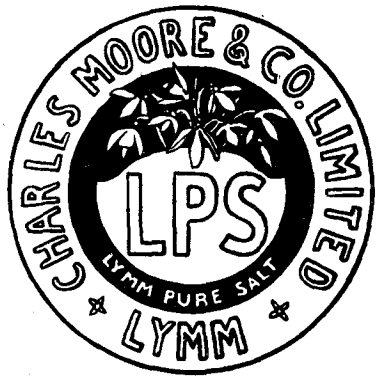

The essential particulars of this trade mark are the device and the distinctive label; and applicants disclaim any right to the exclusive use of the added matter, except as regards their name and address.

NAME.

CHARLES MOORE AND CO., LIMITED, of Lymm Salt Works, Heatley, in Lymm, near Warrington, in the County of Chester, England.

No. of class: 42.

Description of goods: Salt.

No. of application: 8531.

Date: 1st February, 1910.

TRADE MARK.

The word

TARGET.

NAME.

ROBT. INGHAM CLARK AND CO. (AUSTRALASIA), LIMITED, of 38 Market Street, Sydney, State of New South Wales, in the Commonwealth of Australia, Paint and Varnish Manufacturers.

No. of class: 1.

Description of goods: Paints, varnishes, japans, driers, enamels, and varnish-stains.

No. of application: 8536.

Date: 3rd February, 1910.

TRADE MARK.

The essential particular of this trade mark is the combination of devices and the word "Fiscal"; and any right to the exclusive use of the added matter is disclaimed.

NAME.

T. W. WHITTLE, of 113 Lichfield Street, Christchurch, in the Dominion of New Zealand.

No. of class: 50.

Description of goods: Black and brown boot-polish.

No. of application: 8537.

Date: 3rd February, 1910.

TRADE MARK.

The essential particular of this trade mark is the distinctive label.

NAME.

C. A. WOOLSEY PAINT AND COLOUR COMPANY, a corporation duly organized under the laws of the State of New Jersey, of 500 Grand Street, Jersey City, Hudson County, New Jersey, U.S.A.

No. of class: 1.

Description of goods: Paints.

No. of application: 8543.

Date: 7th February, 1910.

TRADE MARK.

The word

WACA.

NAME.

WHITTOME, STEVENSON, AND CO., LIMITED, of the City of Auckland, in the Provincial District of Auckland, in the Dominion of New Zealand, Manufacturers.

No. of class: 42.

Description of goods: Substances used as food or as ingredients in food, such as limejuice, cordials, non-aerated beverages, non-alcoholic beverages, essences, salad-oil, jellies, vinegar, chutney, curry-powder, pickles, sauces, and condiments.

No. of application: 8544.

Date: 8th February, 1910.

TRADE MARK.

The word

WEKA.

NAME.

ROBERT SHERIFF BLACK, of Dunedin, in the Dominion of New Zealand, Rabbit-exporter.

No. of class: 13.

Description of goods: Traps for animals.

No. of application: 8545.

Date: 9th February, 1910.

TRADE MARK.

The word

LACTOID.

NAME.

RALPH READER PARNHAM, of Devonport, Auckland, in the Dominion of New Zealand, Chemist.

No. of class: 42.

Description of goods: Tablets for use in the manufacture of butter-milk.

No. of application: 8546.

Date: 9th February, 1910.

TRADE MARK.

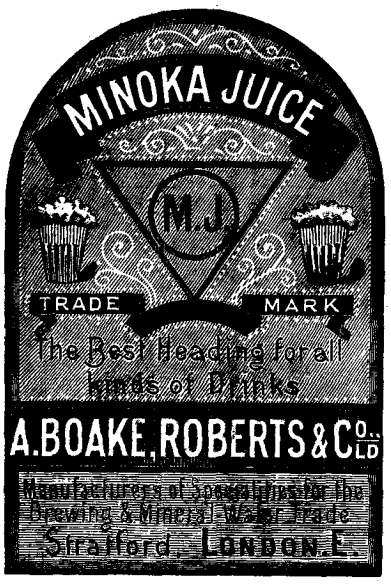

The essential particulars of this trade mark are the combination of devices, comprising the triangle enclosing circle and the letters "M.J.", also the word "Minoka"; and the proprietors disclaim any right to the exclusive use of the added matter, save and except the words "A. Boake Roberts and Co., Limited, Stratford, London E.," being the trade name of the proprietors and their place of business.

NAME.

A. BOAKE ROBERTS AND CO., LIMITED, of Stratford, London E., England, Manufacturing Chemists.

No. of class: 42.

Description of goods: A preparation for producing a frothy head on beers (alcoholic and non-alcoholic), and aerated waters, and beverages of every description.

No. of application: 8548.

Date: 9th February, 1910.

TRADE MARK.

ANDREW USHER & Co
EDINBURGH

EXTRA
FINE OLD SCOTCH WHISKY

London & Export Agents
FRANK BAILEY & Co 59 MARK LANE. LONDON. E.C.

The essential particular of this trade mark is the distinctive label.

NAME.

ANDREW USHER AND CO., of 34 West Nicolson Street, Edinburgh, Scotland, and 59 Mark Lane, London E.C., England, Distillers.

No. of class: 43.

Description of goods: Whisky.

No. of application: 8549.

Date: 9th February, 1910.

TRADE MARK.

F. E. MYERS & BRO.

MFG'S. MYERS PUMPS & CYLINDERS

ASHLAND, OHIO, U. S. A.

The applicants claim that the said trade mark has been used by them in respect of the articles mentioned from 1882.

NAME.

F. E. MYERS AND BRO., a copartnership composed of Francis E. Myers and Phillip A. Myers, doing business at the City of Ashland, State of Ohio, United States of America, Manufacturers.

No. of class: 6.

Description of goods: Pumps and cylinders.

No. of application: 8553.

Date: 12th February, 1910.

TRADE MARK.

"THE MAORI" LEAD PENCIL.

The essential particular of this trade mark are the words "The Maori"; and any right to the exclusive use of the words "Lead Pencil" is disclaimed.

NAME.

LYRA LEAD PENCIL COMPANY, of Nürnberg, Bavaria, Pencil-manufacturers.

No. of class: 39.

Description of goods: Lead-pencils.

No. of application: 8554.

Date: 14th February, 1910.

TRADE MARK.

FIBRELIN.

EXTRA STRONG.

The essential particular of this trade mark is the word "Fibrelin"; and any right to the exclusive use of the added matter is disclaimed.

(Used as a water-mark on writing-paper.)

NAME.

THE BRETT PRINTING AND PUBLISHING COMPANY, LIMITED, of Auckland, in the Dominion of New Zealand.

No. of class: 39.

Description of goods: Writing-paper.

No. of application: 8555.

Date: 14th February, 1910.

TRADE MARK.

OROLIN.

EXTRA STRONG.

The essential particular of this trade mark is the word "Orolin"; and any right to the exclusive use of the added matter is disclaimed.

(Used as a water-mark on writing-paper.)

NAME.

THE BRETT PRINTING AND PUBLISHING COMPANY, LIMITED, of Auckland, in the Dominion of New Zealand.

No. of class: 39.

Description of goods: Writing-paper.

J. C. LEWIS,
Registrar.

Request for Correction of Clerical Error in Application for Trade Mark allowed.

THE request to correct clerical error in application No. 8387—British Empire Trading Company, Limited—(advertised in Supplement to *New Zealand Gazette*, No. 2, of the 13th January, 1910) has been allowed.

Trade Marks registered.

LIST of Trade Marks registered from the 5th to the 18th February, 1910, inclusive:—

Nos. 6649/8303 and 6650/8304.—Lever Bros., Limited. Classes 47 and 48. (*Gazette* No. 88, of the 21st October, 1909.)

No. 6651/8379.—International Drink Cure Company. Class 3. (*Gazette* No. 101, of the 2nd December, 1909.)

No. 6652/8194.—Continental-Caoutchouc-und-Gutta-Percha-Compagnie. Class 40. (*Gazette* No. 75, of the 9th September, 1909.)

No. 6653/8319.—Ludford, Kirby, and Co. Class 47. (*Gazette* No. 93, of the 4th November, 1909.)

No. 6654/7786.—Murray, Roberts, and Co. Class 2. (*Gazette* No. 7, of the 28th January, 1909.)

No. 6655/8209.—A. F. Toomer. Class 38. (*Gazette* No. 75, of the 9th September, 1909.)

No. 6656/8323.—G. A. Coles and Co., Limited. Class 38. (*Gazette* No. 93, of the 4th November, 1909.)

No. 6657/8386.—W. A. Hargreaves. Class 4. (*Gazette* No. 101, of the 2nd December, 1909.)

No. 6658/8387.—The British Empire Trading Company, Limited. Class 45. (*Gazette* No. 101, of the 2nd December, 1909.)

No. 6659/8375.—John Walker and Sons, Limited. Class 43. (*Gazette* No. 101, of the 2nd December, 1909.)

No. 6660/8382.—The Spirella Company. Class 38. (*Gazette* No. 101, of the 2nd December, 1909.)

No. 6661/8376.—Flint and Walling Manufacturing Company. Class 6. (*Gazette* No. 101, of the 2nd December, 1909.)

No. 6662/7927.—B. G. Pratt Company. Class 2. (*Gazette* No. 101, of the 2nd December, 1909.)

No. 6663/8166.—C. Davidson and Sons, Limited. Class 36. (*Gazette* No. 101, of the 2nd December, 1909.)

No. 6664/7833.—H. Gray. Class 42. (*Gazette* No. 16, of the 25th February, 1909.)

No. 6665/7835.—W. H. Hazard. Class 20. (*Gazette* No. 16, of the 25th February, 1909.)

Nos. 6666/8408 and 6667/8409.—Fletcher, Humphries, and Co. Classes 42 and 43. (*Gazette* No. 101, of the 2nd December, 1909.)

No. 6668/8137.—T. D. Lambert, jun. Class 2. (*Gazette* No. 66, of the 12th August, 1909.)

No. 6669/7894.—Field and Co., Fruit Merchants, Limited. Class 42. (*Gazette* No. 38, of the 6th May, 1909.)

No. 6670/7918.—Field and Co., Fruit Merchants, Limited. Class 42. (*Gazette* No. 30, of the 8th April, 1909.)

Nos. 6671/8199, 6672/8200, and 6673/8201.—Tootal Broadhurst Lee Company, Limited. Classes 24, 25, and 24. (*Gazette* No. 61, of the 6th August, 1908.)

Subsequent Proprietors of Trade Marks registered.

[NOTE.—The name of the former proprietor is given in brackets; the date is that of registration.]

NOS. 1933/1542, 1934/1543, 2764/2141, 2766/2142, 2837/2243, 3263/2593, 3305/2594, 3702/2885, 3704/2886, 3705/2887, 3701/2894, 3703/2966, 3964/3114, 4320/3471, 4321/3472, 6544/5196, 6545/5195, 6546/5194.—Vacuum Oil Company Proprietary, Limited, a corporation registered in the State of Victoria, one of the States of the Commonwealth of Australia, and having its principal office in the City of Melbourne, in the said State of Victoria. (Vacuum Oil Company.) 11th February, 1910.

Trade Mark Renewal Fees paid.

FEES paid for the renewal of the undermentioned Trade Marks for fourteen years from the date first mentioned:—

No. 1639/1310.—11th February, 1910.—Salt Union, Limited, of London, Eng. 10th February, 1910.

No. 1654/1586.—11th March, 1910.—Barry's Bay Co-operative Dairy Factory Company, Limited, of Barry's Bay, N.Z. 17th February, 1910.

Trade Marks removed from the Register.

TRADE Marks removed from the Register owing to the non-payment of the renewal fee, from the 5th to the 18th February, 1910, inclusive:—

No. 1554/1309.—5th November, 1895.—H. Wertheim, of Melbourne, Vic. Class 22.

No. 1559/1264.—13th November, 1895.—R. and W. H. Symington and Co., of Market Harborough, Eng. Class 38.

No. 1563/1467.—13th November, 1895.—D. Brown and Son, Limited, of Donaghmore, Ireland. Class 47.

No. 1565/1268.—15th November, 1895.—C. E. Parrington, of Hawera, N.Z. Class 43.

By Authority: JOHN MACKAY, Government Printer, Wellington

ILLUSTRATIONS OF INVENTIONS.

[These illustrations refer to the complete specifications accepted, and advertised in this *Gazette*.]

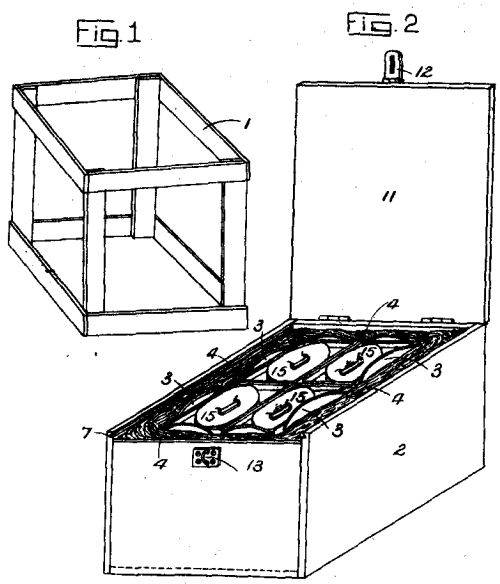

Cooker, Fireless. Braik. 25617.

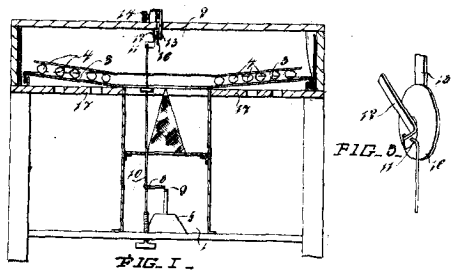

Incubator. Woodroffe 25670.

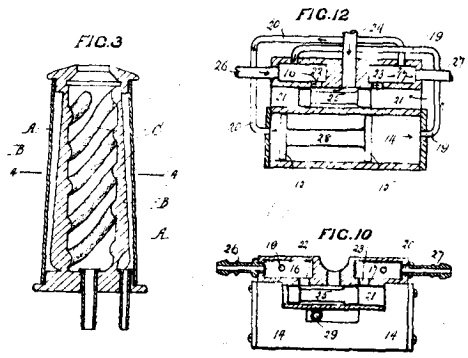

Milking-machine. Ridd. 25683.

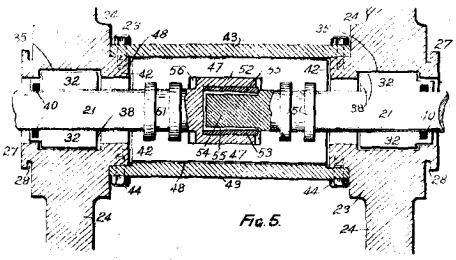

Railway-car-running Gear. Angus. 25706.

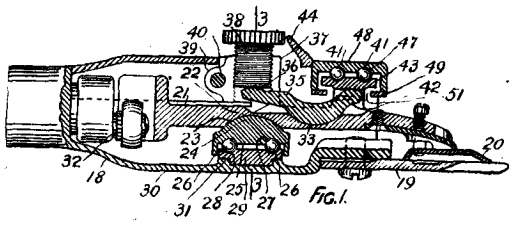

Sheep-shears, Machine Bennett. 25806.

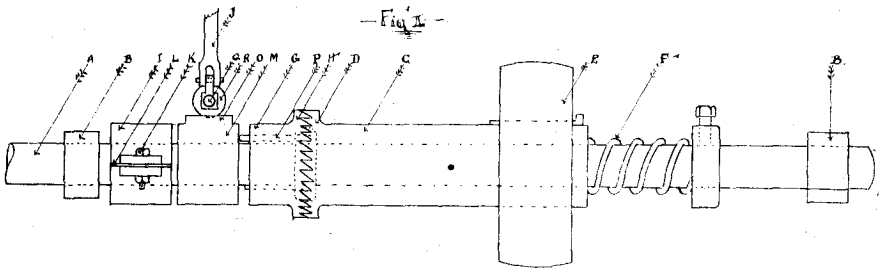

Flax-catcher. Suttie and Wynyard. 25776.

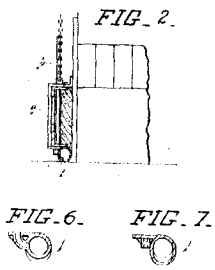

Furnace-door. Beveridge. 25835.

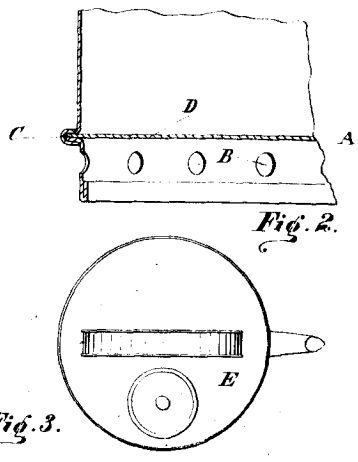

Cooking-utensil. Philips. 26513.

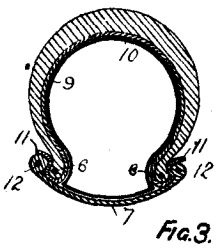

Tire, Pneumatic. 26559.

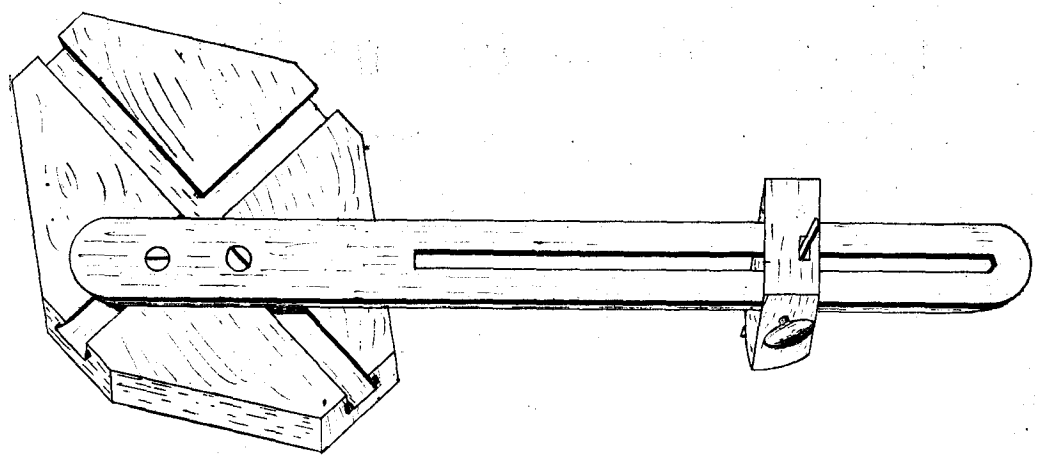

Picture-mount Cutter. Wallis. 27168.

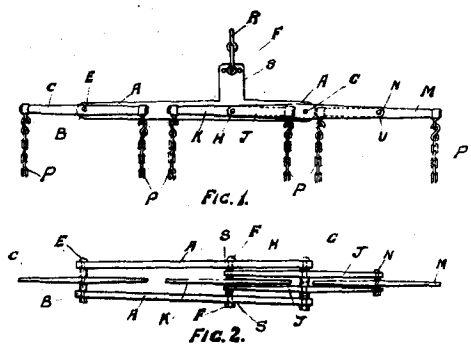

Swingletree. Hill. 27182.

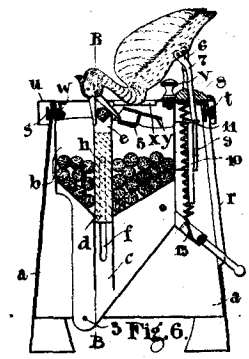

Delivering-apparatus, Automatic. Stiles. 27153.

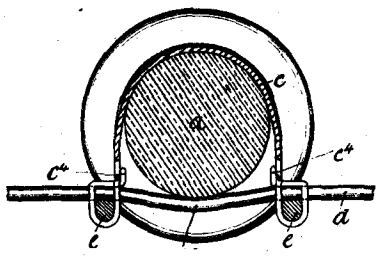

Insulator-wire Attachment. Bandfield. 27170.

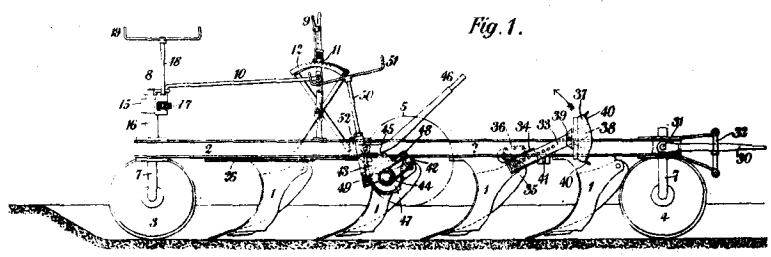

Plough. McLaren, J. and H. 27189.

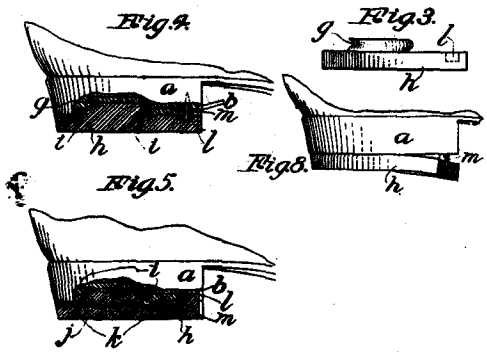

Boot-heel. Mitchell. (Haslam.) 27179.

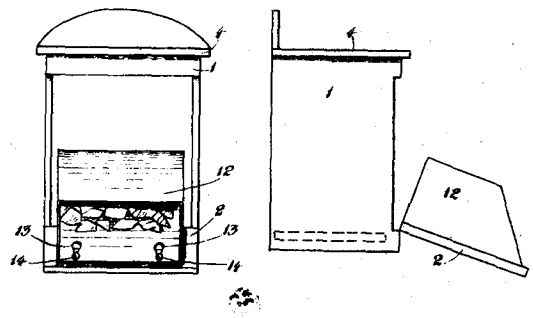

Furniture. Christian. 27234.

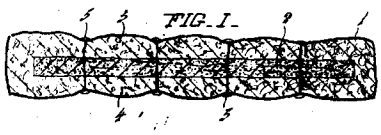

Mattress. McCrae. 27188.

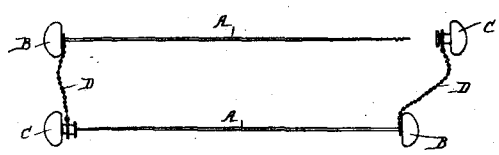

Hat-pin. Dillimore. 27203.

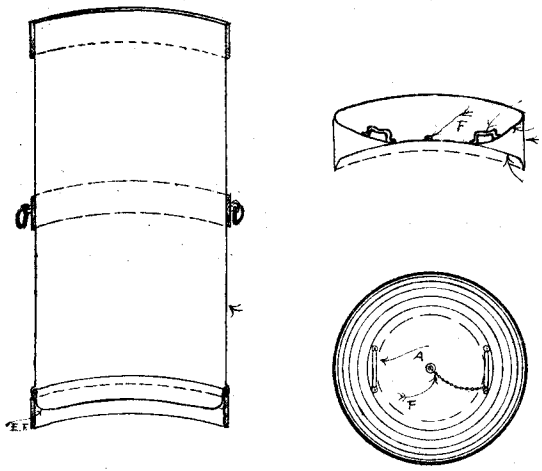

Milk-can. Carruthers. 27242.

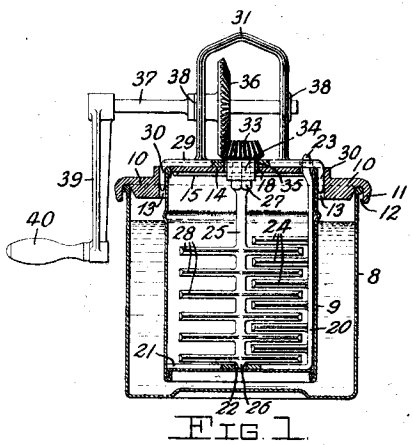

Butter-blending Machine. Corney. 27253.

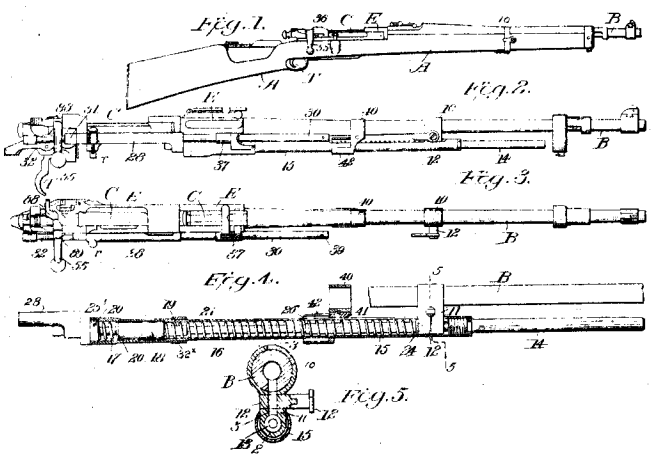

Gun. Hammond and Darlington. 27196.

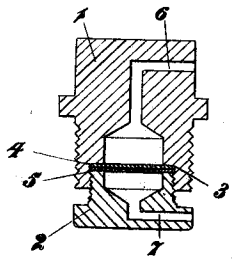

Reservoir Plug and Valve (Liquid or Gas). Eckersley. 27184.

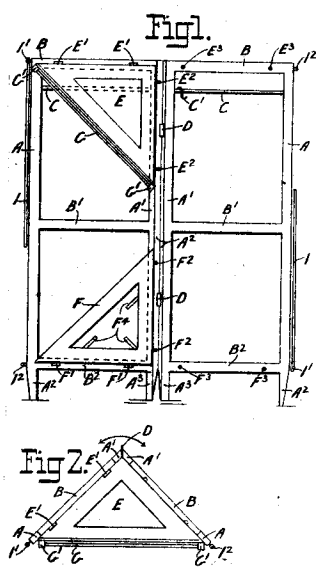

Wardrobe. May, R. and F. E., and Railton. 27273.

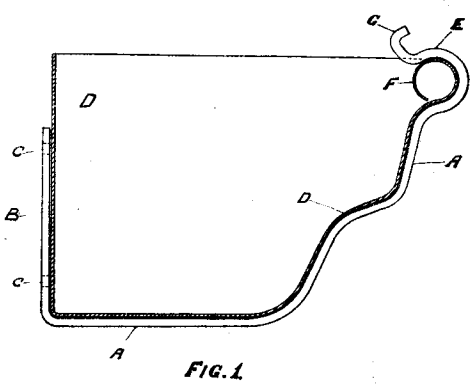

Spouting-bracket. Hardley, J. W., S., and C. E. 27215.

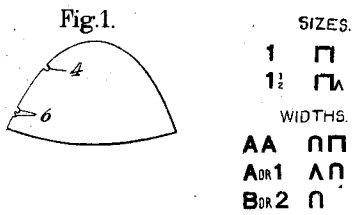

Boot-manufacture. Files. 27134.

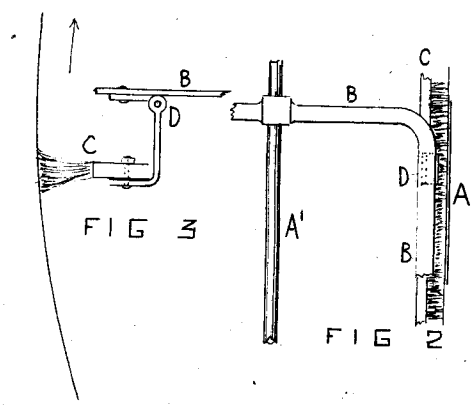

Pasteuriser-brush Carrier. Hunter. 27224.

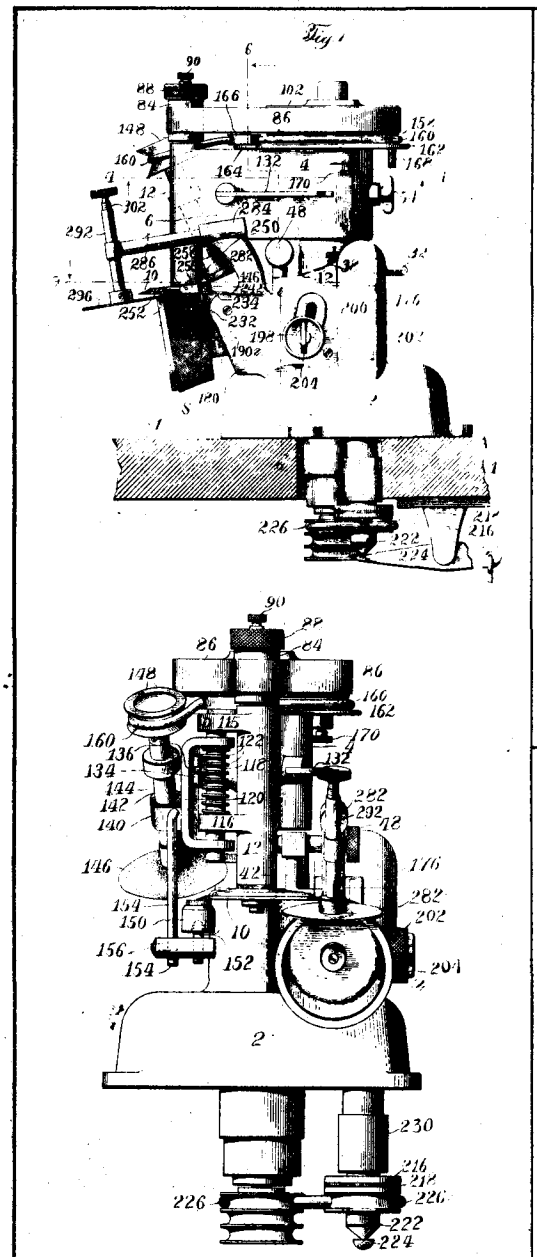

Boots: Skiving-machine. Booth. 25771.

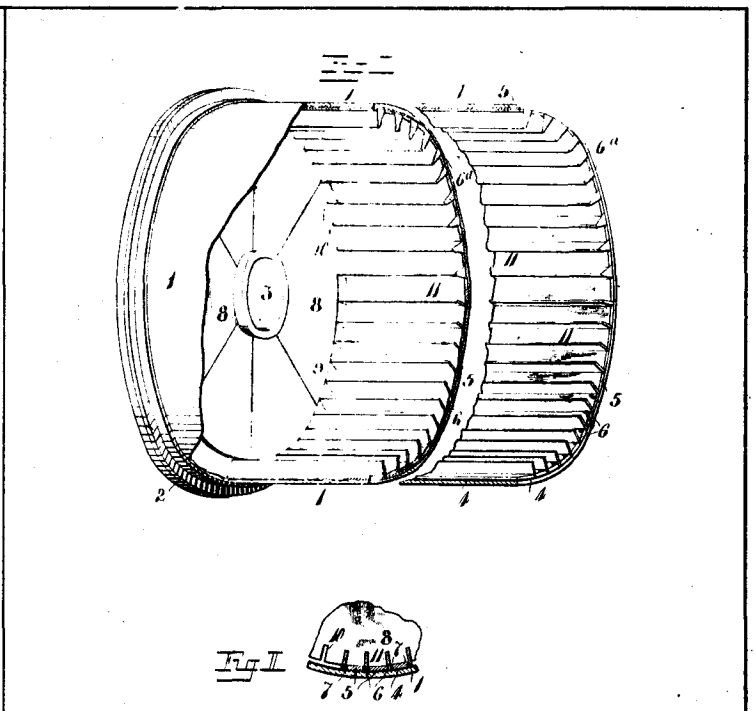

Tube-mill Lining. Osborn. 25839.

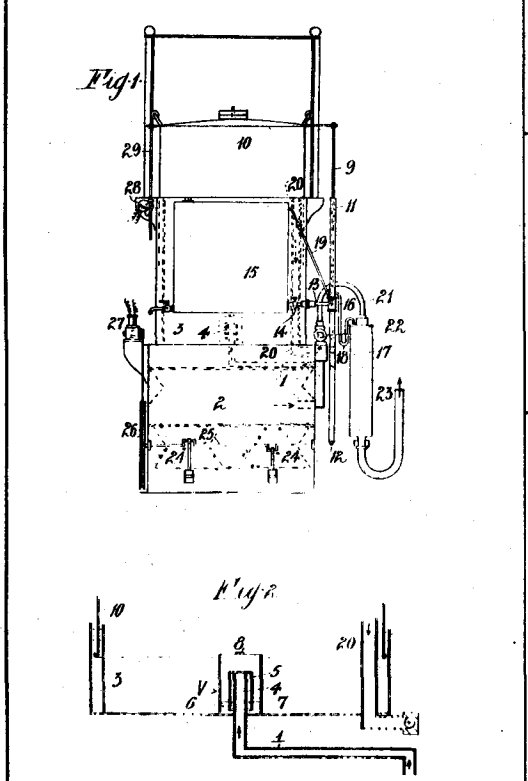

Gas: Air-supply and Carburetter. Rolfe. 26256.

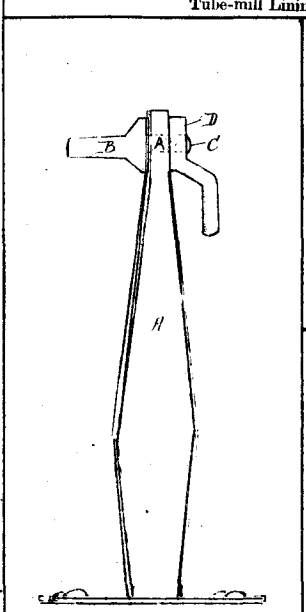

Boot-last Stand. Giles and Retter. 26760.

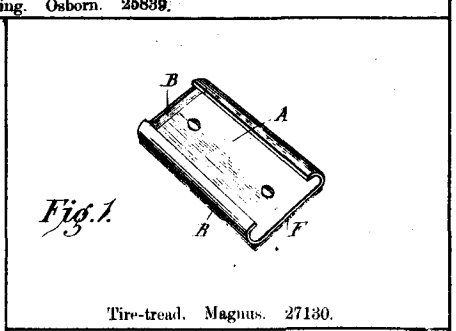

Tire-tread. Magnus. 27130.

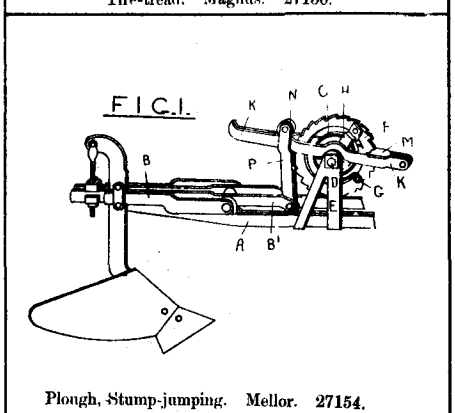

Plough, Stump-jumping. Mellor. 27154.

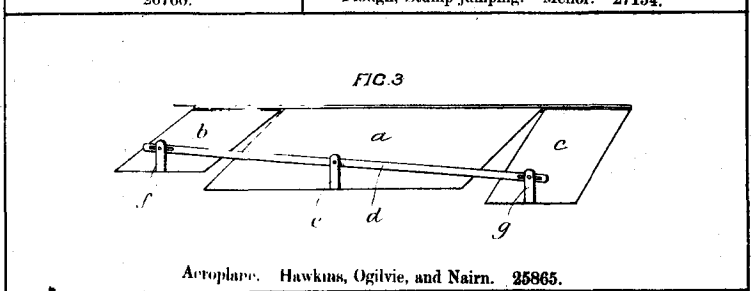

Aeroplane. Hawkins, Ogilvie, and Nairn. 25865.

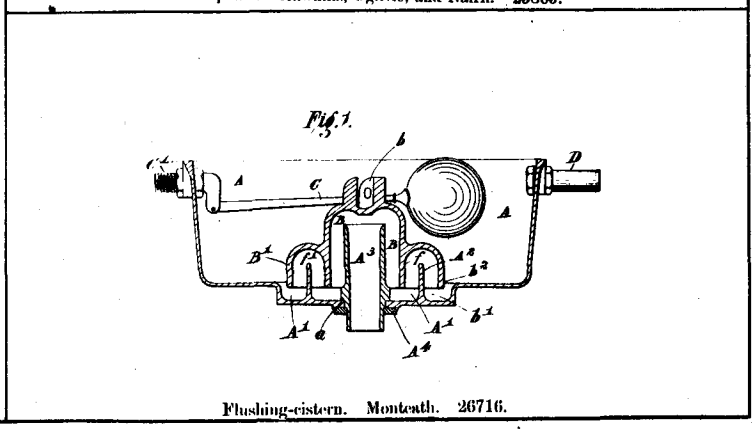

Flushing-cistern. Monteath. 26716.